HARTING M12
system cable, 4-wire, straight resp. angled

Identification		Part number	Drawing	Dimensions in mm
HARTING M12 system cable, 4-wire, angled				
one side assembled		Black		
Length	0.5 m	09 48 800 0011 005		
	1.0 m	09 48 800 0011 010		
	2.0 m	09 48 800 0011 020		
	2.5 m	09 48 800 0011 025		
	5.0 m	09 48 800 0011 050		
	7.5 m	09 48 800 0011 075		
	10.0 m	09 48 800 0011 100		
	15.0 m	09 48 800 0011 150		
	20.0 m	09 48 800 0011 200		
both sides assembled		Black		
Length	0.5 m	09 48 808 0011 005		
	1.0 m	09 48 808 0011 010		
	2.0 m	09 48 808 0011 020		
	2.5 m	09 48 808 0011 025		
	5.0 m	09 48 808 0011 050		
	7.5 m	09 48 808 0011 075		
	10.0 m	09 48 808 0011 100		
	15.0 m	09 48 808 0011 150		
	20.0 m	09 48 808 0011 200		

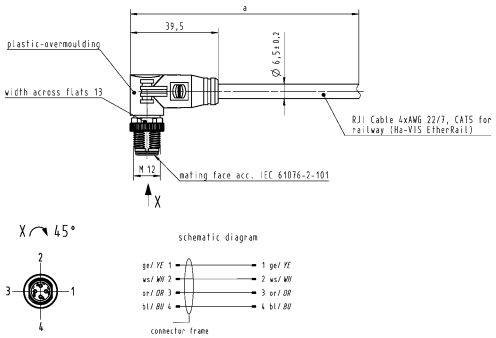

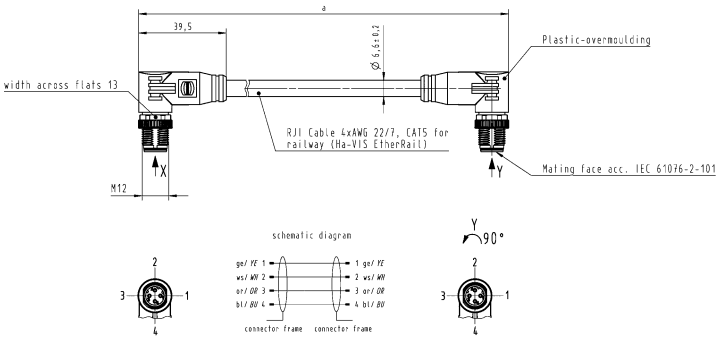

Other cable lengths on request