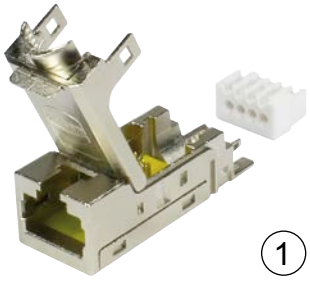

Han® 3 A RJ45 Metal Outlet

Identification	Part number	Drawing	Dimensions in mm
Han® 3 A RJ45 junction box empty (1) For fixture of 2x RJ45 female inserts	09 45 815 0000	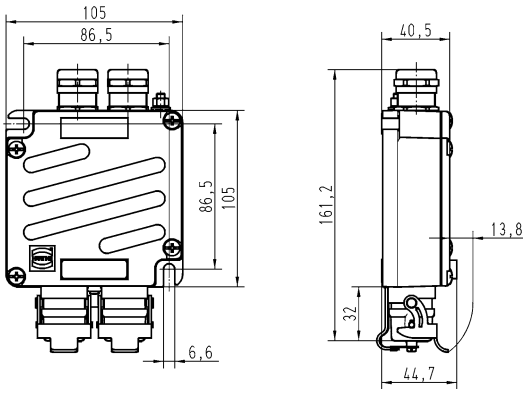	
RJ45 female inserts (2) Cat. 5, 4 poles, 10 Mbit/s, 100 Mbit/s IDC for AWG 24-22 solid and stranded	09 45 545 1120	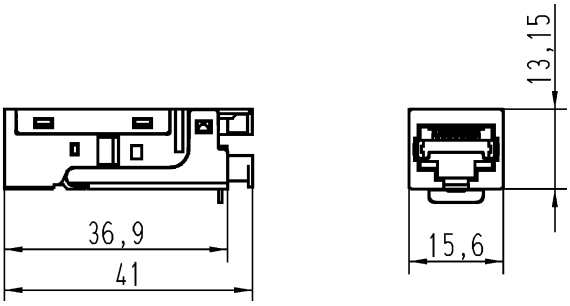	
Cat. 6_A, 8 poles, 10 Mbit/s, 100 Mbit/s and 1 Gbit/s, 10 Gbit/s IDC for AWG 28-24 solid and stranded	09 45 545 1561		
Cat. 6_A, 8 poles, 10 Mbit/s, 100 Mbit/s and 1 Gbit/s, 10 Gbit/s IDC for AWG 24-22 solid and stranded	09 45 545 1562		
Cat. 6_A, 8 poles, 10 Mbit/s, 100 Mbit/s and 1 Gbit/s, 10 Gbit/s preLink® IDC for AWG 23/22 solid and stranded	20 82 001 0001		
Cat. 6_A, 8 poles, 10 Mbit/s, 100 Mbit/s and 1 Gbit/s, 10 Gbit/s preLink® IDC for AWG 27/26 solid and stranded	20 82 001 0002		
Cat. 6_A, 8 poles, 10 Mbit/s, 100 Mbit/s and 1 Gbit/s, 10 Gbit/s preLink® IDC for AWG 23/22 or AWG 27/26 depending on the separately orderable preLink® terminal module (20 82 000 0001 / 20 82 000 0003)	20 82 000 0002		