preLink® PCB jack

Advantages

- Easy device integration
- Robust design
- 360° shielding
- Suitable for wave and reflow soldering (PSL RO and MSL 1)
- Suitable for solid and stranded wires
- Suitable for PoE (IEEE 802.3af) and PoE+ (IEEE 802.3at)
- Very fast **preLink®** termination technology

Technical characteristics

Connector type	PCB jack 8 poles THR
Number of contacts	8
Shielding	fully shielded, 360° shielding contact
Mounting	preLink® IDC termination
Cable termination for preLink® terminal module, yellow, 20 82 000 0001 and black, 20 82 000 0005 resp. 20 82 000 0005 XL	
Connectable cables	
– Conductor cross section	AWG 23 … AWG 22 (solid and stranded)
– Conductor diameter	1.3 … 1.6 mm
Cable termination for preLink® terminal module, white, 20 82 000 0003	
Connectable cables	
– Conductor cross section	AWG 27 … AWG 26 (solid and stranded)
– Conductor diameter	0.8 … 1.1 mm
Cable diameter	5.0 … 9.5 mm
Degree of protection	IP20
Mating cycles	min. 10
Temperature range	-40 °C … +85 °C

Identification	Part number
preLink® PCB jack	20 82 007 1100
preLink® terminal module	
AWG 22/23, yellow[1]	20 82 000 0001
AWG 26/27, white[1]	20 82 000 0003
AWG 22/23, black[1], 4 poles	20 82 000 0005
AWG 22/23, black[2], 4 poles	20 82 000 0005 XL
preLink® assembly tool	20 82 000 9901

Drawing — Dimensions in mm

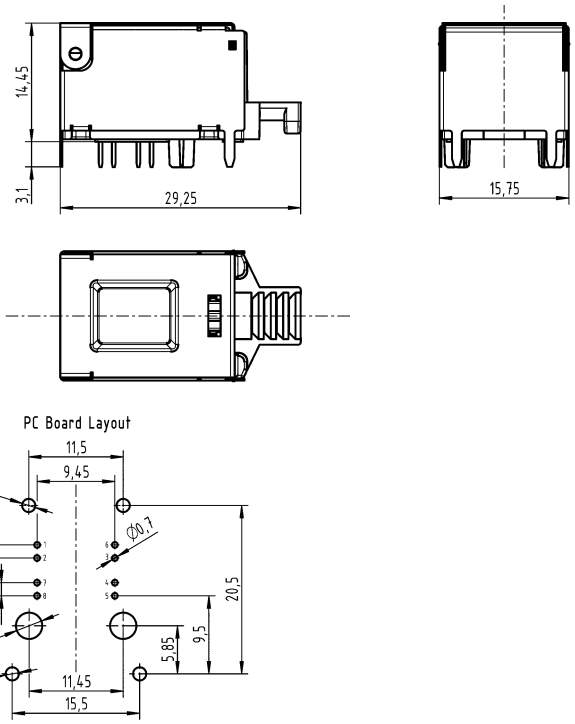

Further information and data sheets see www.HARTING.com

[1] Packaging with 10 pieces

[2] Packaging with 100 pieces