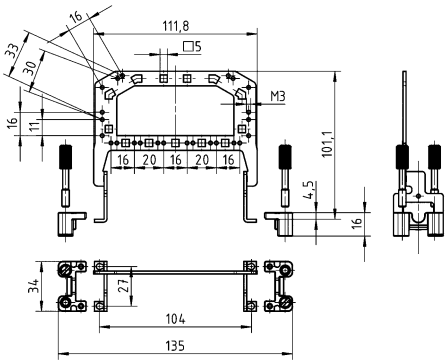Identification	Size	Part number	Drawing (dimensions in mm)
Han-Modular®, Grip frame, With screw adapter and screw to use in connection with 09 00 000 5602 	06 B 10 B 16 B 24 B	09 00 006 5605 09 00 010 5605 09 00 016 5605 09 00 024 5605