Number of contacts

# 21 + 5

F + M

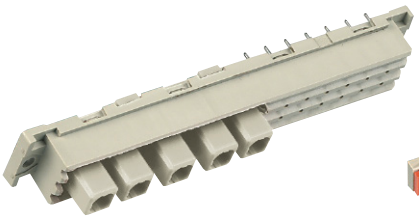

Ⓘ

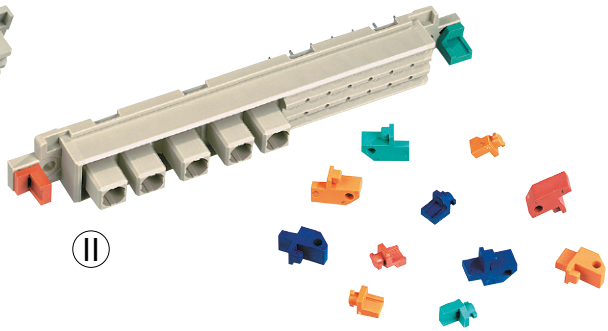

Ⓘ Ⓘ

## Female connectors

| Identification | No. of contacts | Part number 3 | Performance levels according to IEC 60603-2. Explanation chapter 00 2 | 1 |
|---|---|---|---|---|
| Female connector with solder pins 3.2 mm (without special contacts) | | | | |
| without flange coding Ⓘ | 21 + 5 | Performance level 3 on request | 09 06 221 6883 | Performance level 1 on request |
| with flange coding[1] Ⓘ Ⓘ | 21 + 5 | | 09 06 721 6883 | |
| High current contact Crimp contacts for printed circuit termination 20 A | | | 09 03 000 6220 | |

Dimensions

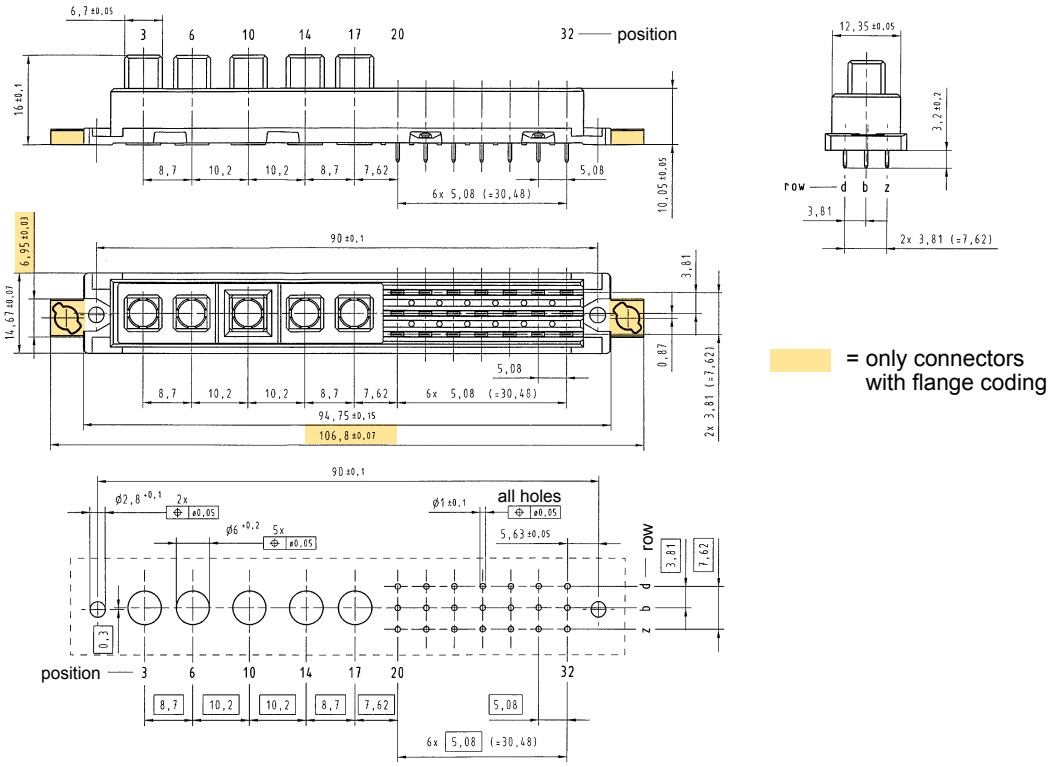


Dimensions

09 03 000 6220

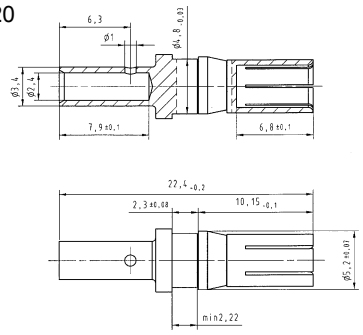


Dimensions in mm

[1] Code keys see chapter 00

Removal tool for contacts is available with part number 09 99 000 0174

Further special contacts see chapter 01