Han® PushPull RJ45 Plastic

Han® PushPull, type acc. to IEC 61 076-3-117 variant 14
RJ45 panel feed through

Features

- HARTING PushPull technology
- Compact design
- High packing density
- Device integration via RJ45 PCB connectors

Technical characteristics

Locking	PushPull technology acc. to IEC 61 076-3-117
Degree of protection	IP65 / IP67
Mating face	RJ45 acc. to IEC 60 603-7
Transmission performance	acc. to ISO/IEC 11 801:2002, EN 50 173-1, category 5 / class D up to 100 MHz resp. category 6 / class E_A up to 500 MHz
Transmission rate	10 / 100 Mbit/s and 1 / 10 Gbit/s
Number of contacts	8
Shielding	Fully shielded, 360° shielding contact (Cat. 6)
Mating cycles	min. 750
Temperature range	-40 °C ... +70 °C
Housing material	Plastic, black
Flammability acc. to UL 94	V0

Identification	Part number
Han® PushPull RJ45	
Panel feed through Cat. 6 including housing and HARTING RJ Industrial® 10G RJ45 bulkhead	09 35 225 0331
Panel feed through to mount HIFF inserts, e.g. Ha-VIS preLink® RJ45-module Order inserts separately	09 35 012 0331
Ha-VIS preLink® set RJ45 jack AWG 22/23	
consists of: • 1x Ha-VIS preLink® module RJ45 jack • 1x Ha-VIS preLink® terminal module • 1x cable tie	20 82 001 0001
HARTING RJ Industrial® cable jack IDC	
AWG 22-24, 8-poles, Cat. 6	09 45 545 1562
AWG 24-28, 8-poles, Cat. 6	09 45 545 1561
AWG 22-24, 4-poles, Cat. 5	09 45 545 1120

Drawing — Dimensions in mm

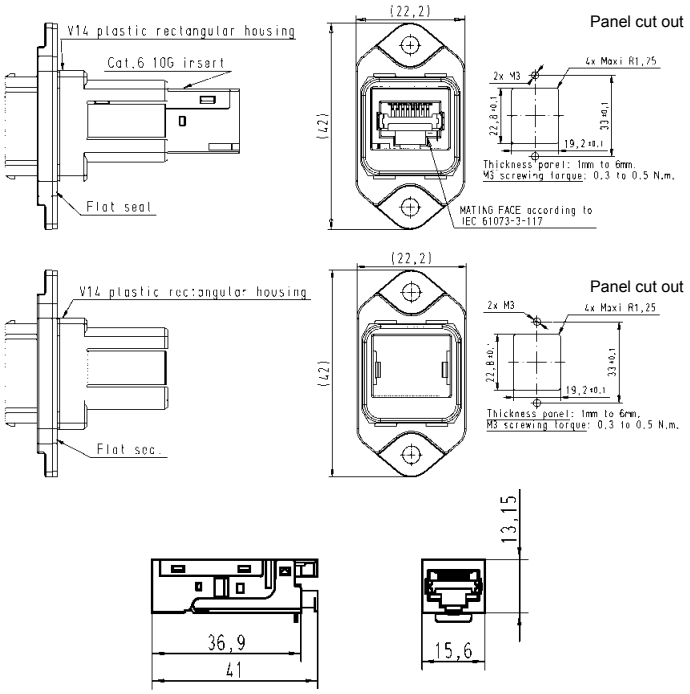

Recommendation for female insert and assembly manual on request.