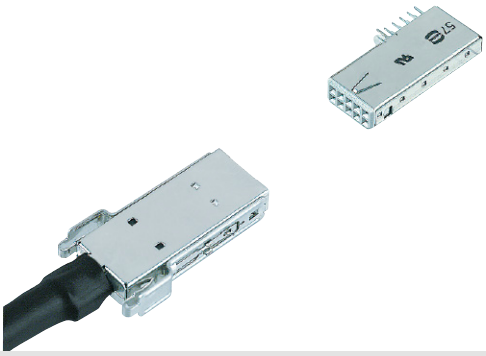

# Male connectors, straight
# Female connectors, angled

| Identification | No. of contacts | Colour | Part number |
|---|---|---|---|
| Male connector<br>for insulation displacement | 10 | Black | 27 11 161 8001 |
| Female connector<br>with solder pins | 10 | Beige (standard) | 27 21 121 8000 |
| | 10 | Red | 27 21 121 8002 |
| | 10 | Yellow | 27 21 121 8004 |
| | 10 | Green | 27 21 121 8005 |
| | 10 | Blue | 27 21 121 8006 |
| | 10 | Black | 27 21 121 8010 |

Male connector
(delivered in piece parts)

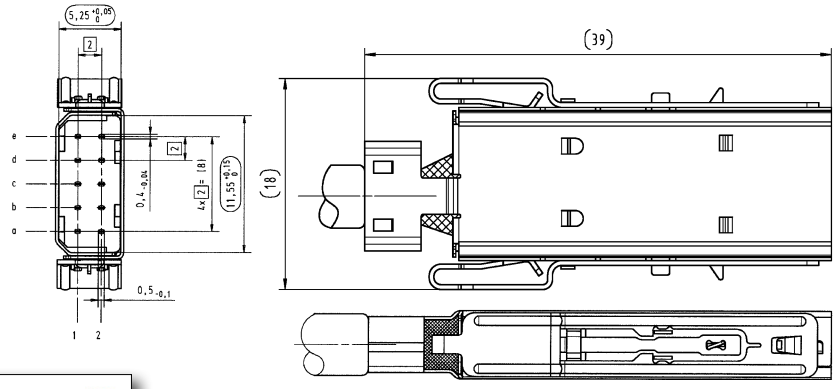

Manuals for the *har-link*® cable free connector assemblies are available on demand. Please contact your local HARTING representative.

Female connector

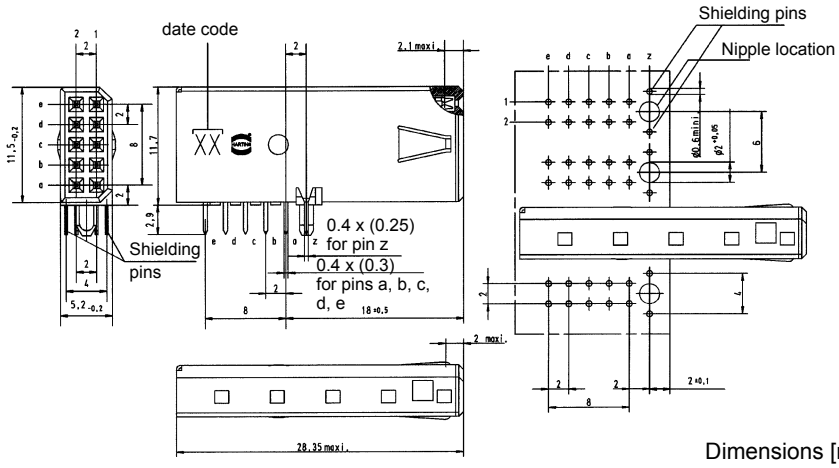


Dimensions [mm]



Tooling see chapter 20