Identification	Part number	Drawing	Dimensions in mm
Han® PushPull panel feed-through HIFF to hold the 10-poles insert		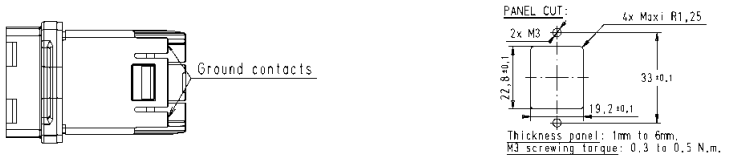	
Metal rectangular	09 35 012 0311	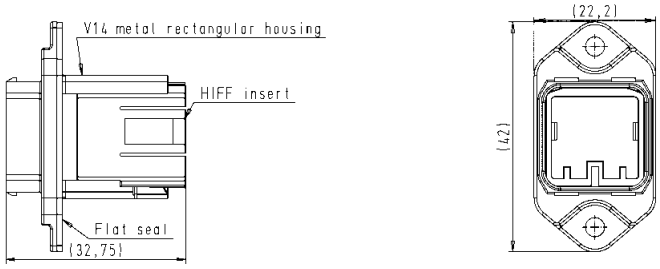	
Metal circular	09 35 012 0312	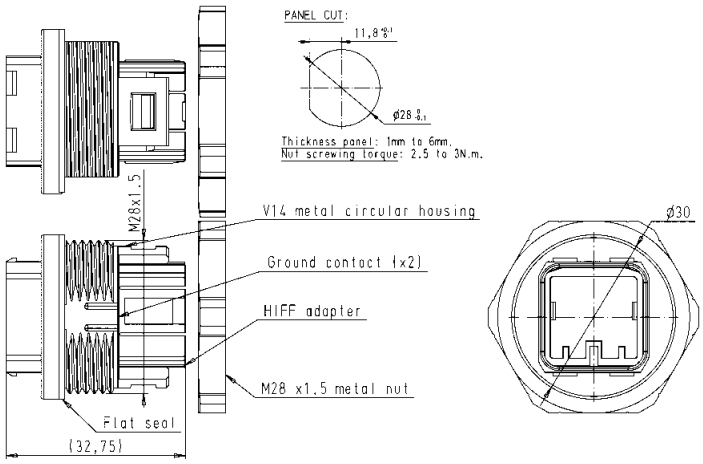	
Plastic rectangular	09 35 012 0331	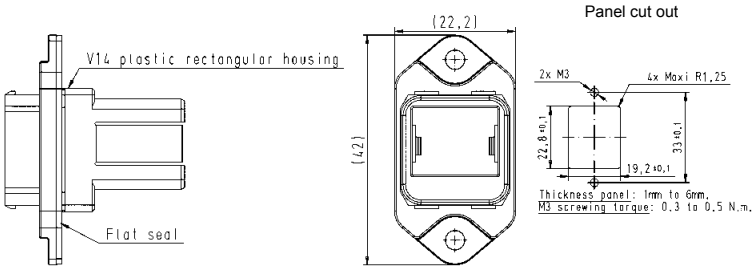	
Han® PushPull Signal solder jack angled	09 35 002 6001	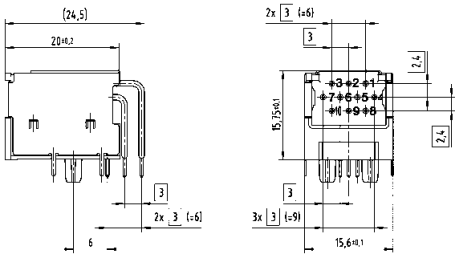	
Han® PushPull Signal solder jack straight suitable housings, bulkhead mounting	09 35 002 6002	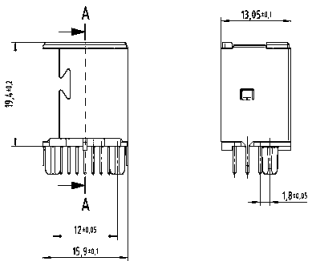	
Metal	09 35 002 0303		
Plastic	09 35 002 0323		