Identification	Part number	Drawing	Dimensions in mm
Han® PushPull RJ45 10G			
Panel feed-through to mount HIFF inserts, e.g. Ha-VIS preLink® RJ45-module, RJ Industrial cable jack Order inserts separately		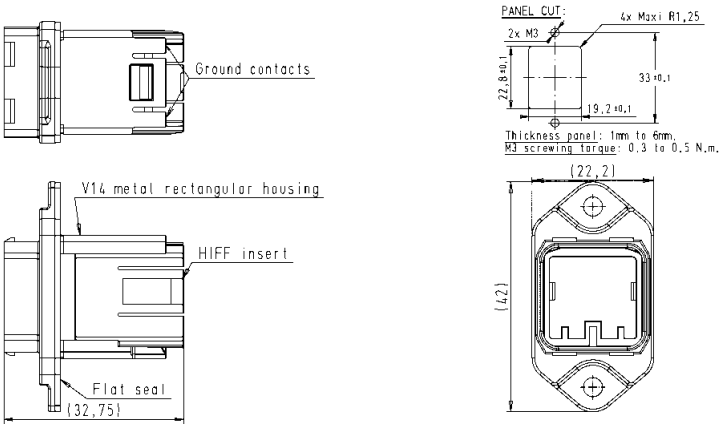	
Bulkhead housing for rectangular panel cut out, incl. plastic adapter	09 35 012 0311		
Bulkhead housing for circular panel cut out, incl. plastic adapter and fixing nut	09 35 012 0312	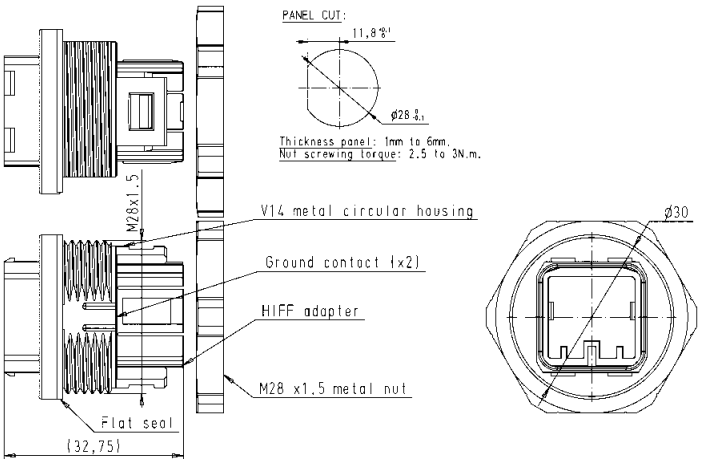	
Ha-VIS preLink® set RJ45 jack AWG 22/23 consists of: • 1x Ha-VIS preLink® module RJ45 jack • 1x Ha-VIS preLink® terminal module • 1x cable tie	20 82 001 0001	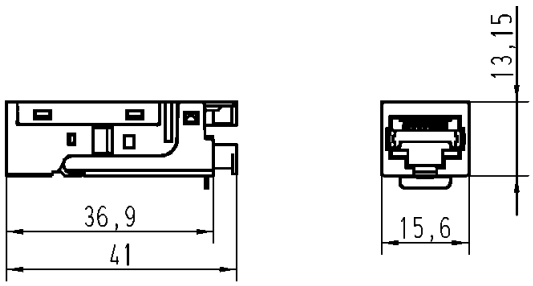	
HARTING RJ Industrial® cable jack IDC			
AWG 22-24, 8-poles, Cat. 6	09 45 545 1562		
AWG 24-28, 8-poles, Cat. 6	09 45 545 1561		
AWG 22-24, 4-poles, Cat. 5	09 45 545 1120		