Han® 3 A, Hybrid, components device side panel feed-throughs

Identification	Part number	Drawing	Dimensions in mm
RJ45 female for direct device integration solder variant SMD 90° angled I	 09 45 551 1100[1)] 09 45 551 1110[2)]	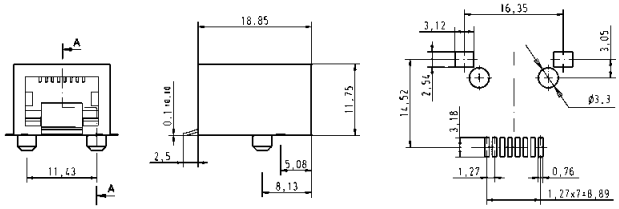	pcb layout
Power module with 4 contacts for direct device integration Reel with 100 pieces II	 09 45 525 0040 09 45 525 0041	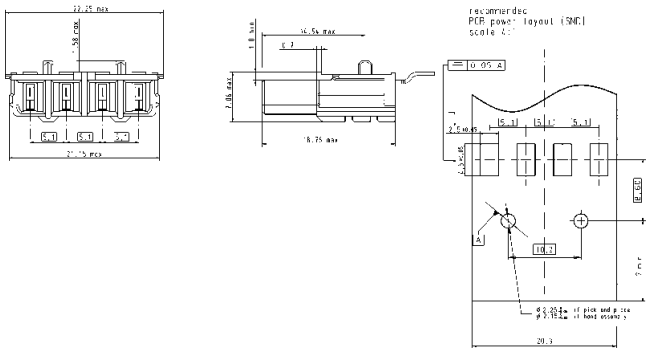	
Housing bulkhead mounting **separate** incl. flat seal for direct device integration Plastic version, black Metal version Standard, grey Metal version M, black Metal version EMC, unpainted III	 09 45 525 0021 10 12 005 1004 09 45 525 0027 09 45 525 0028	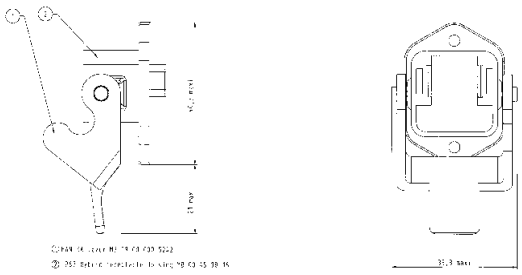	Dimensions valid for plastic version
Panel feed-through set Plastic version, black, Cat. 5 Metal version Standard, grey, Cat. 5 Metal version M, black, Cat. 5 Metal version Standard, grey, Cat. 6 Metal version M, black, Cat. 6 IV	 09 45 225 1300 10 12 005 1002 09 45 215 1301 09 45 215 1760 09 45 215 1761	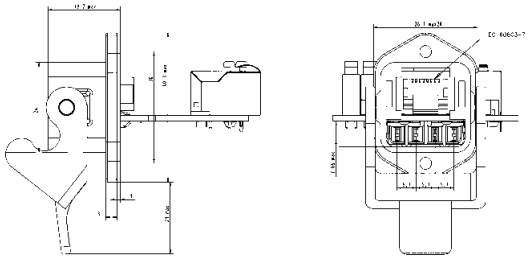	
Protection cover for panel feed-through IP65 / IP67 Plastic version, black Metal version Standard, grey Metal version M, black	 09 20 003 5449 09 20 003 5425 09 37 003 5405	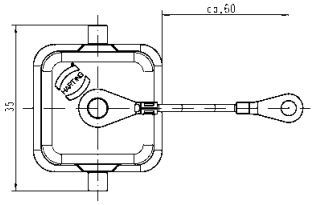	

[1)] Packaging: Blister à 120 pieces
[2)] Packaging: Tape & Reel à 130 pieces

Technical characteristics and general informations see page 04.15