M12 PCB adapter shielded A-coded

Mating face

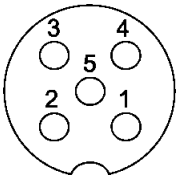

A-coding
Mating face
acc. to IEC 61076-2-101

Circular Connectors

Identification	Part number	Drawing	Dimensions in mm
M12 PCB adapter, shielded			
Packaging: 60 pieces in a tray **Order housing separately**			
Female			
4 poles, A-coding	21 03 321 2418*		
5 poles, A-coding	21 03 321 2518*		
8 poles, A-coding	21 03 321 2818*		
Packaging: 1 piece incl. housing			
Female			
5 poles, A-coding, rear mounting	21 03 321 2530*		
8 poles, A-coding, rear mounting	21 03 321 2830*		
5 poles, A-coding, front mounting	21 03 321 2531*		
8 poles, A-coding, front mounting	21 03 321 2831		
Housing			
Packaging: 10 pieces in a tube			
for rear mounting	21 03 301 2000		
for front mounting	21 03 301 2003		

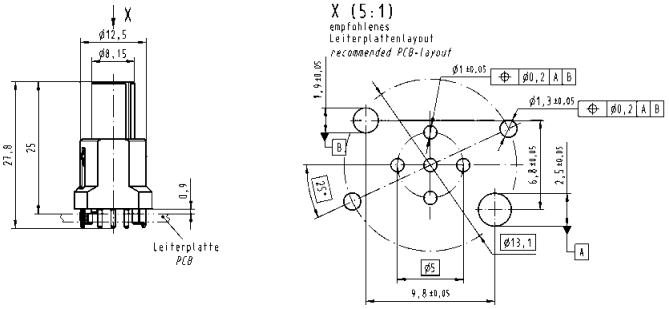

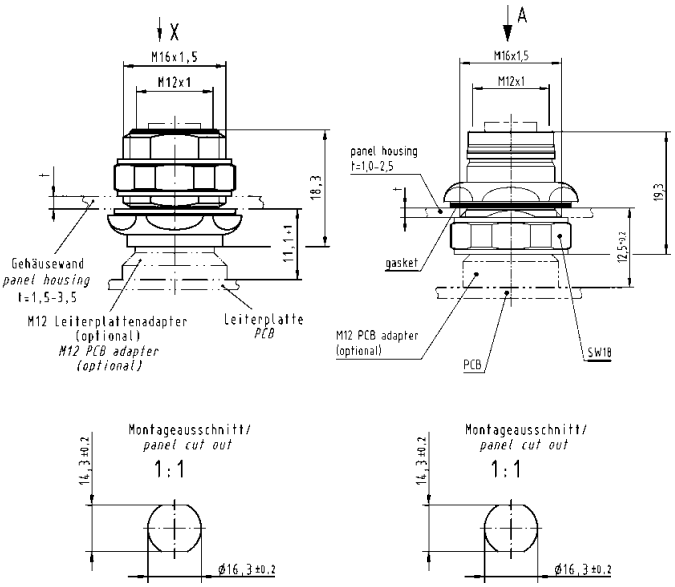

Further information and data sheets see www.HARTING.com
* UL approval is in preparation