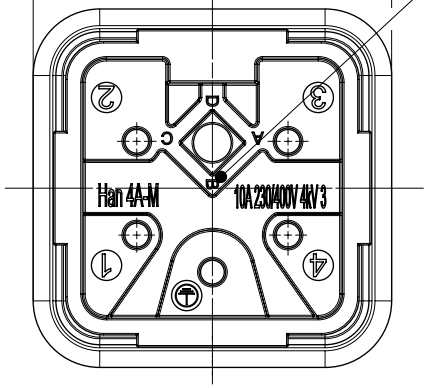

Coding pin
Enclosed separately

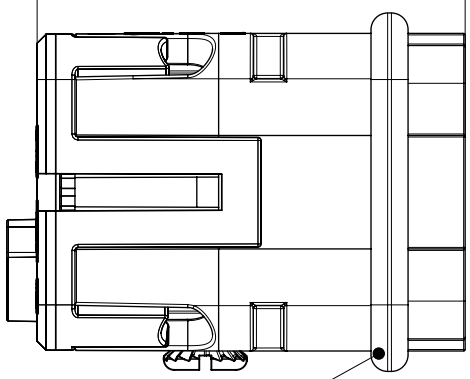

Gasket

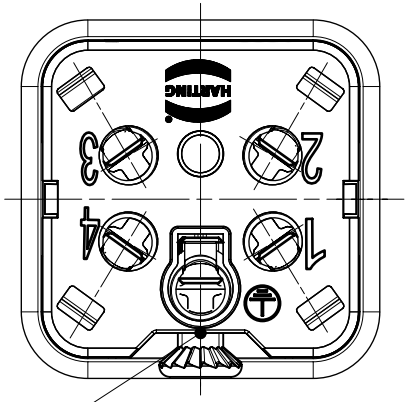

countersunk screw M3x6
enclosed separately

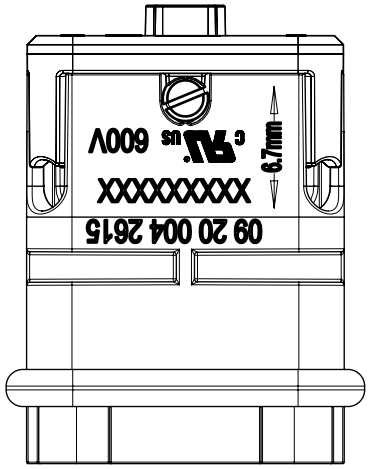

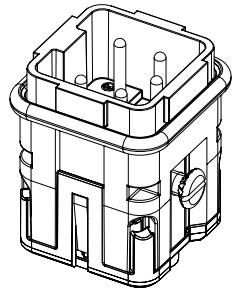

All Dimensions in mm Original Size DIN A4	Scale 2:1	Free size tol.		Ref. Sub. 09 20 004 2615	
All rights reserved Department EL PD	Created by 405690	Inspected by 408501	Standardisation	Date 16-Jul-2024	State 40 - Released
	Title Han 4A male - coding				Doc-Key / ECM-Nr. DS00202185
HARTING D-32339 Espelkamp	Type TB	Design Number DS00202185	SAP Mat. Number 09200042615	Rev. G	Page 1/1

A4