Identification	Part No.	Drawing	Dimensions in mm
HARTING PushPull Signal			
Insert for panel feed-through HIFF, 10-poles incl. male insert	09 45 545 9010	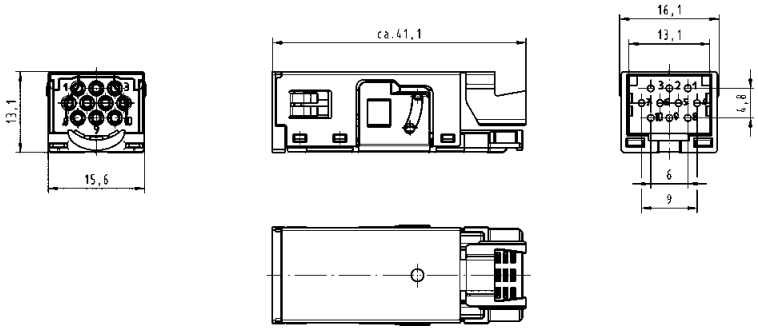	
Order D-Sub crimp male contacts separately			
D-Sub crimp contacts for device side			
male, turned AWG 24-20; 0.25-0.52 mm²	09 67 000 8576[1)]		
male, turned AWG 22-18; 0.33-0.82 mm²	09 67 000 3576[1)]		
male, stamped AWG 24-20; 0.25-0.56 mm²	09 67 000 8178[2)]		
HARTING PushPull suitable housing, bulkhead mounting, plastic			
EasyInstall	09 45 545 0032	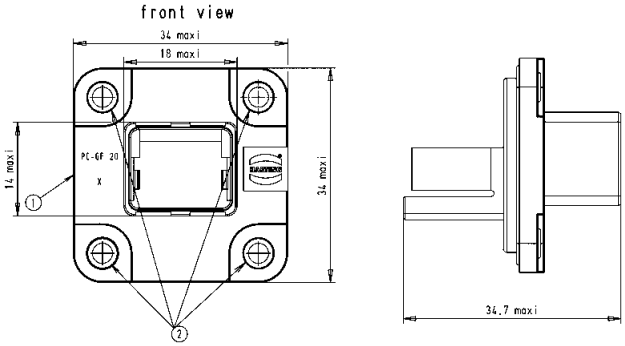	
Compact	09 45 545 0028	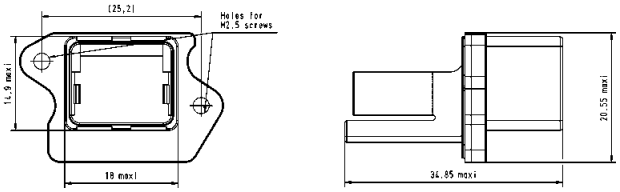	
HARTING PushPull Signal solder jack angled	09 45 545 9011	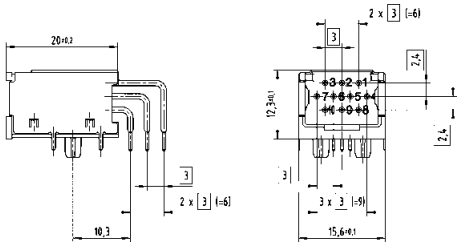	
suitable housings, bulkhead mounting			
with fixing clip	09 45 545 0029		
without fixing clip	09 45 545 0033		
HARTING PushPull Signal solder jack straight	09 45 545 9012	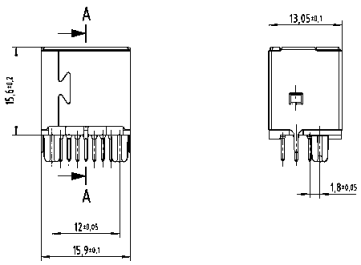	
suitable housing, bulkhead mounting	09 45 545 0027		

[1)] To be used with crimp tool 09 99 000 0501. Suitable locator: 09 99 000 0531
[2)] To be used with crimp tool 09 99 000 0175.