Number of contacts

max. 32

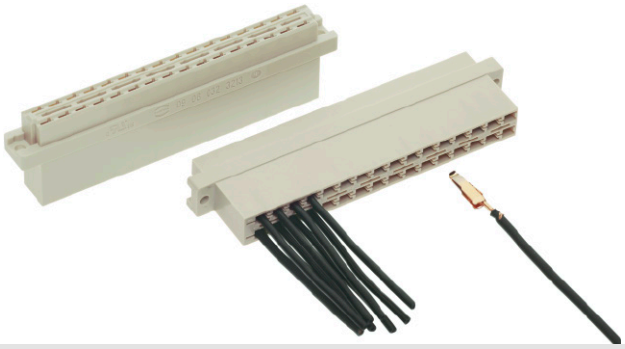

Female connectors

Identification	No. of contacts	Part number
Female connector for crimp contacts Order contacts separately	32 32	09 04 032 3213[f)] 09 04 532 3213[c)f)]

Shell housing
09 03 096 0501
see chapter 20

Drawing — Dimensions in mm

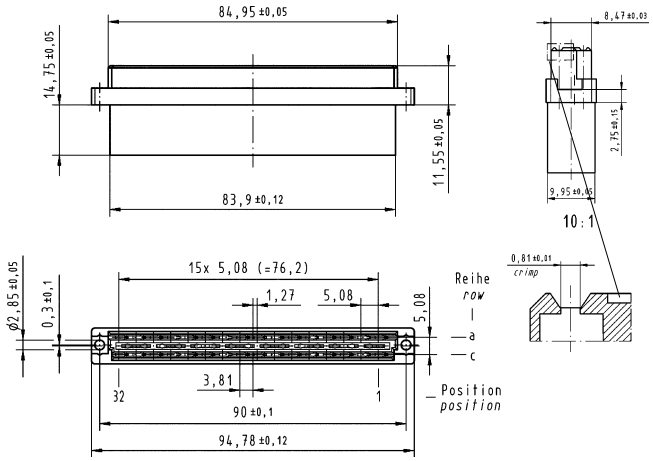

Identification	Identification Wire gauge	Part number 2	Part number 1
Female crimp FC contacts			
Bandoliered contacts (approx. 2,500 pieces)	1 2 3	09 06 000 6484 09 06 000 6481 09 06 000 6482	09 06 000 6474 09 06 000 6471 09 06 000 6472
Bandoliered contacts (approx. 250 pieces)	1 2 3	09 06 000 7484 09 06 000 7481 09 06 000 7482	09 06 000 7474 09 06 000 7471 09 06 000 7472
Individual contacts[1)]	1 2 3	09 06 000 8484 09 06 000 8481 09 06 000 8482	09 06 000 8474 09 06 000 8471 09 06 000 8472
Female contacts with solder lugs[2)] (lockable)			09 06 000 6420

		Wire gauge mm²	AWG	Insulation ø mm
FC 1	1	0.09 - 0.25	28 - 24	0.7 - 1.5
FC 2	2	0.14 - 0.56	26 - 20	0.8 - 2.0
FC 3	3	0.5 - 1.5	20 - 16	1.6 - 2.8

3.5 + 0.5 mm of insulation is stripped from the wires to be crimped

For the fabrication in line with the specification please use exclusively crimp tools approved by HARTING (see DIN EN 60 352-2)

Insertion, removal and crimping tools see chapter 30

Identification

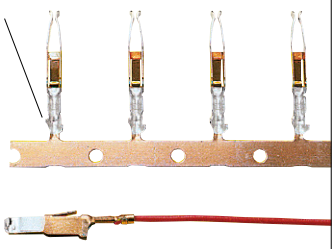

Bandoliered contacts

Individual contacts

[1)] Packaging unit 1,000 pieces
[2)] Solder contacts must not be used together with shell housing A. Special contact surface: 2 µm gold.
[c)] Connectors with coding see chapter 00
[f)] Railway classification NFF 16-101, Smoke index: F1, Flammability class: I2