Number of contacts

160

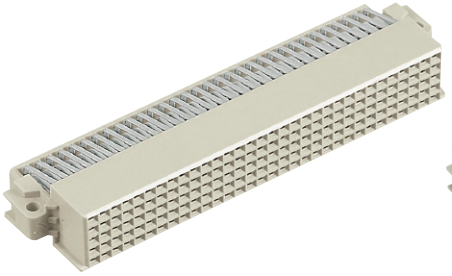

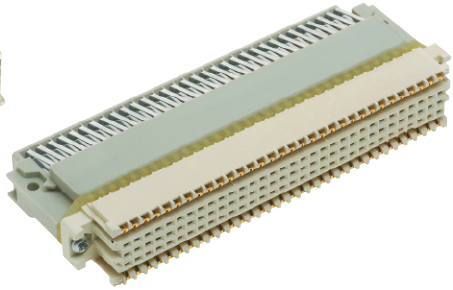

Female connectors

Identification	No. of contacts	Contact arrangement	Part number Performance level 1 according to IEC 61 076-4-113 Explanation chapter 00
Female connectors, angled with solder pins			
for rear access	160	z, a, b, c, d	02 04 160 1101
for har-bus® 64 male connector	160	z, a, b, c, d	02 07 160 1101

Dimensions
02 04 160 1101

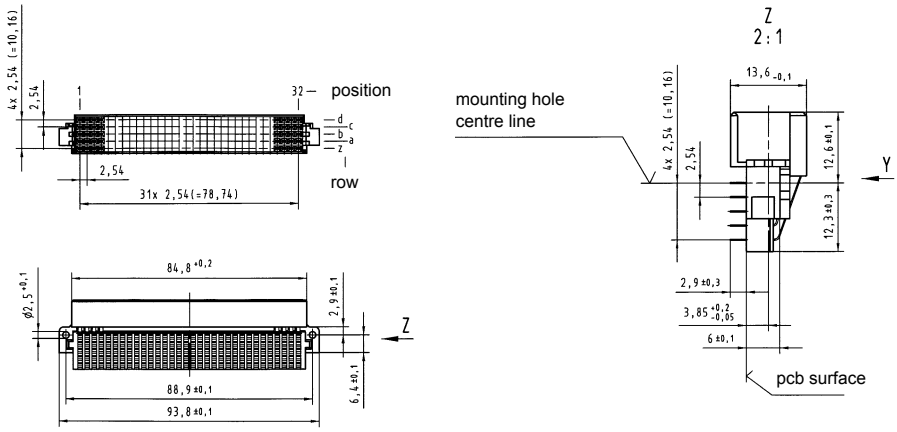

Dimensions
02 07 160 1101

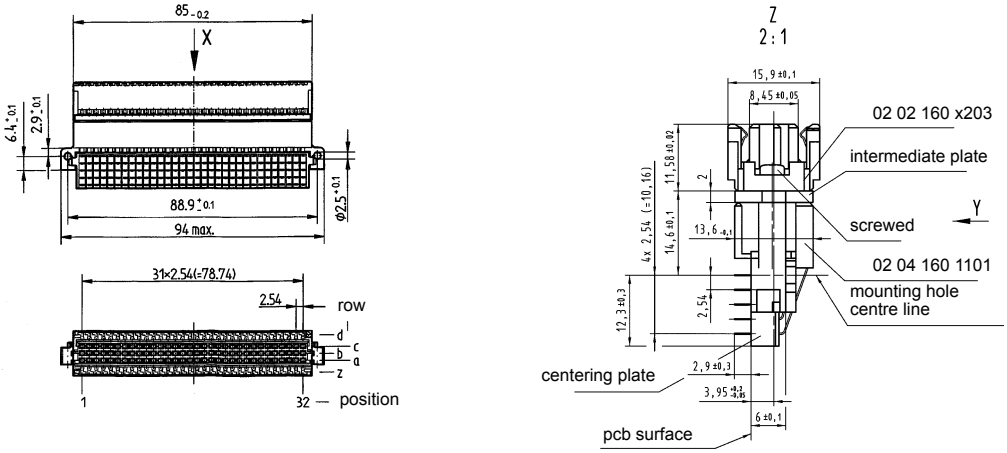

Board drillings
Mounting side

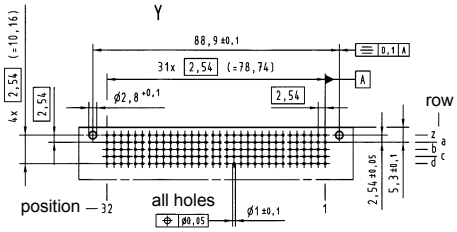

Dimensions in mm