Identification	Cable entry	Clamping range (mm)	Part number	Drawing (dimensions in mm)
Han-Eco® B, Bulkhead mounted housing, With thermo-plastic cover, Without frame, IP66 Please order frame 19 43 016 0001 separately.			19 43 016 0312	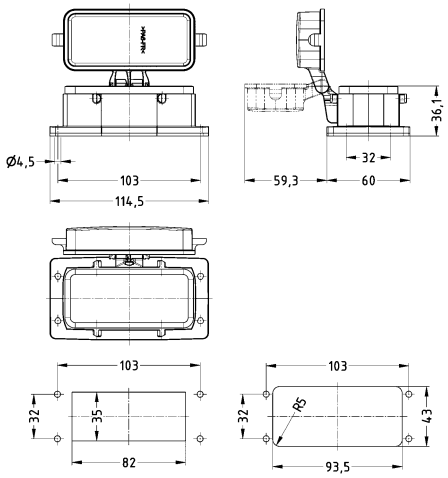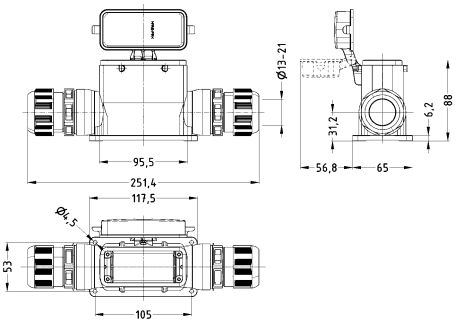 Panel cut out Front mounting / Rear mounting
Han-Eco® B, Surface mounted housing, With thermo-plastic cover, With integrated cable gland, Side entry, IP66 	1x M40 2x M40	16 ... 28 16 ... 28	19 43 116 0228 19 43 116 0268