Hoods/housings for harsh outdoor environments
Screw locking

Identification	Conductor cross-section (mm²)	Part number	Drawing (dimensions in mm)
Han® HPR, Bulkhead mounted housing, Enlarged, IP65, IP68, IP69 / IPX9K acc. to ISO 20653		09 40 024 0368	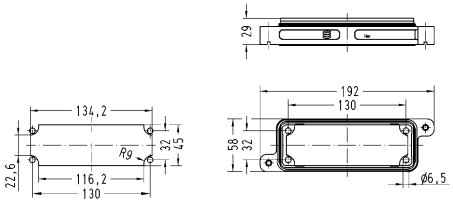
Mounting frames, Han® HPR, Thread M6		09 40 000 9955	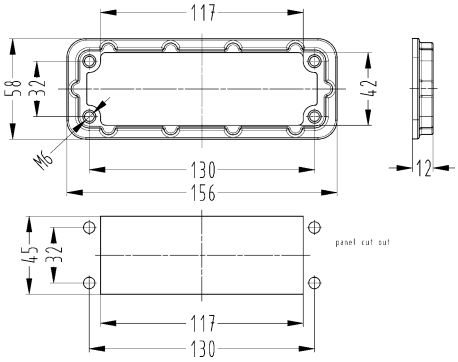
Han® HPR enlarged, Frame, for male inserts, 4x Han® HC Modular 250, Pack contents: 4x cheese-head screw M6 x 20, 4x cheese-head screw M6 x 25, 4x washer SK S6		09 11 000 9927	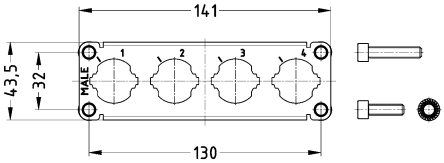 Tightening torque Fixing screws M6: 10 Nm
Han® HPR enlarged, Frame, for female inserts, 4x Han® HC Modular 250, Pack contents: 4x cheese-head screw M6 x 20, 4x cheese-head screw M6 x 25, 4x washer SK S6		09 11 000 9928	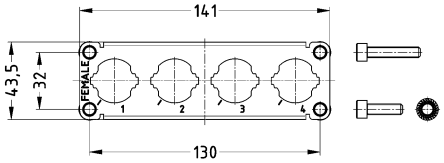 Tightening torque Fixing screws M6: 10 Nm