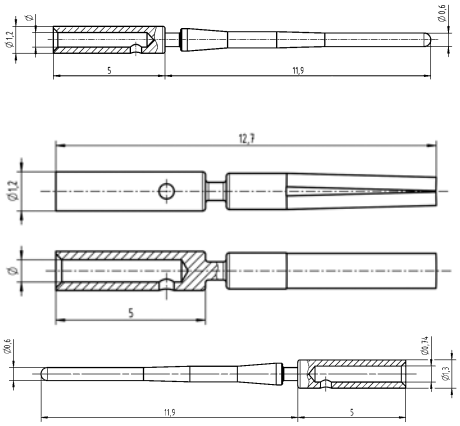Identification	Conductor cross-section (mm²)	Part number Male	Part number Female	Drawing (dimensions in mm)
har-speed, Crimp contact, Contact surface: Gold plated 	0.08 ... 0.22 0.13 ... 0.25	21 01 100 9014 21 01 100 9019	21 01 100 9023 21 01 100 9021